CONVOLUTED (PLEATED), FILTER DISC

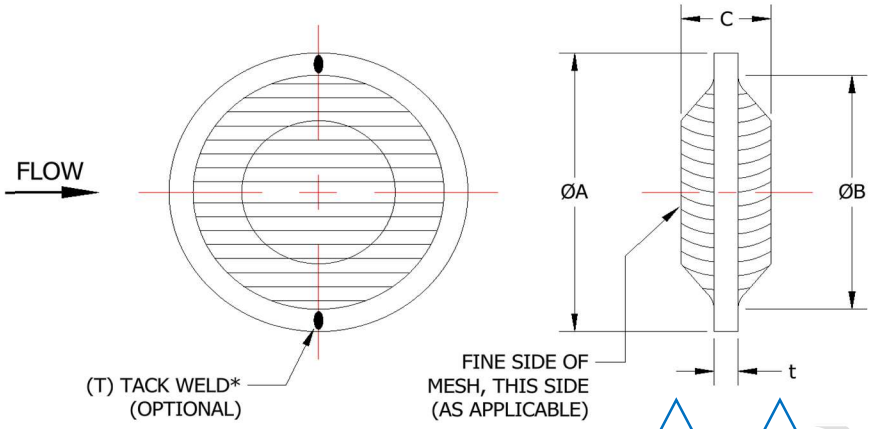

PART NUMBER DEFINITION: 84800 - 1 - 2 - (MATL)

- *ADD "T" FOLLOWING MAIN PART NUMBER (84800T) FOR OPTIONAL TACK WELD TO PREVENT DELAMINATION
- ADD "P" FOLLOWING MAIN PART NUMBER (84800P) FOR PASSIVATION
- STANDARD PASSIVATION: AMS 2700, METHOD 1, TYPE 2, CLASS 2
- MATERIAL: CRES PER AMS-QQ-S-763, CHEMICAL COMPOSITION ONLY
- FILTER MEDIUM: FILTER CAPABLE OF FILTERING LIQUIDS AND GASES
- FILTER MEDIA: STAINLESS STEEL WOVEN WIRE MESH
- STANDARD MATERIAL: 304 CRES
- ALTERNATE MATERIAL: 304L CRES, 316 CRES & 316L CRES
- FOR ALTERNATE MATERIAL LISTED, CONSULT FACTORY FOR AVAILABILITY

ADDITIONAL PART INFORMATION:

- MICRON RATING VERIFICATION: PARTICLE CONTROL ASSURED BY BUBBLE POINT TEST PER ARP-901 PRIOR TO MANUFACTURING (AT RAW MESH LEVEL)
- CONVOLUTED FILTER DISC COLLAPSE PRESSURE: 50 PSID MIN
- CONVOLUTED DISCS ARE ULTRASONICALLY CLEANED AND BULK PACKAGED IN SEALED PLASTIC BAGS
- CONVOLUTED FILTER DISC WILL FIT INTO A "Ø**A**" CAVITY WITH A TOLERANCE OF ±.005

PLEASE NOTE:

- ADDITIONAL NON-STANDARD DISC SIZES AVAILABLE, CONTACT OUR SALES DEPARTMENT FOR ASSISTANCE
- ANY MODIFICATIONS TO STANDARD PART WILL BE RECLASSIFIED AS A CUSTOM PART, REQUIRING A UNIQUE PART NUMBER (NOTE: MIN OUTSIDE DIA. AVAILABLE IS Ø.300)
- TOOLING AND SETUP CHARGES MAY VARY FOR NON-STANDARD DISC SIZES
- CHECK FACTORY FOR LEAD TIME AND AVAILABILITY

PART NUMBER EXAMPLES: 84800TP-1.000-17-316 OR 84800-625-40

Outside Dia. (Ø**A**) 1	**A** ± .005	**B** NOMINAL	**C** NOMINAL	Minimum Effective Filtration Area
375	.375"	.300"	.100"	.22 in^2
500	.500"	.420"	.150"	.66 in^2
625	.625"	.490"	.170"	1.00 in^2
750	.750"	.615"	.170"	1.60 in^2
1.000	1.000"	.875"	.170"	3.25 in^2
1.375	1.375"	1.250"	.170"	6.60 in^2
1.500	1.500"	1.375"	.170"	8.00 in^2

PROPRIETARY

CONVOLUTED (PLEATED), FILTER DISC

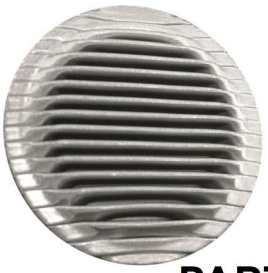

PART NUMBER DEFINITION: 84800 - 1 - 2 - (MATL)

Micron 2	Thickness **t** MAX	When Filtering Liquids		When Filtering Gasses	
		Nominal Micron 98% Removal	Absolute Micron 100% Removal	Nominal Micron 98% Removal	Absolute Micron 100% Removal
02	.02"	2	15	1	9
05	.04"	5	18	3.5	13
10	.04"	10	25	6	18
17	.04"	17	45	11	25
40	.06"	40	65	30	55
70	.06"	70	105	50	85
105	.06"	105	150	85	130
145	.06"	145	205	120	175
250	.07"	250	350	200	300

PROPRIETARY