FILTER FITTING, FLARED
(FOR AS5174 (AN815) APPLICATIONS)

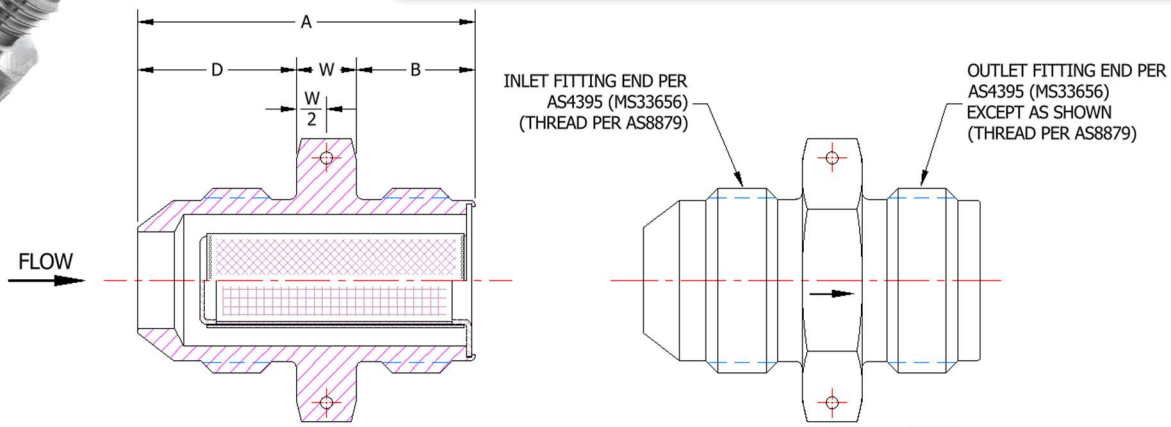

*NOTE: SUPPORT MESH OMITTED FOR 250 MICRONS AND GREATER

PART NUMBER DEFINITION: 84400 - 1 2 - 3

- ADD "P" FOLLOWING MAIN PART NUMBER (84400P) FOR PASSIVATION
- STANDARD PASSIVATION: AMS 2700, METHOD 1, TYPE 2, CLASS 2
- MATERIAL: CRES PER AMS-QQ-S-763, CHEMICAL COMPOSITION ONLY
- FILTER MEDIUM: FILTER CAPABLE OF FILTERING LIQUIDS AND GASES
- FILTER MEDIA: SINTERED STAINLESS STEEL WOVEN WIRE MESH
- STANDARD FILTER ELEMENT MATERIAL: 304 CRES ONLY
- STANDARD FITTING MATERIAL: 304 CRES
- ALTERNATE FITTING MATERIAL: 303 CRES, 316 CRES & 321 CRES
- FOR ALTERNATE MATERIAL LISTED, CONSULT FACTORY FOR AVAILABILITY

ADDITIONAL PART INFORMATION:

- MICRON RATING VERIFICATION: PARTICLE CONTROL ASSURED BY BUBBLE POINT TEST PER ARP-901
- OPERATING TEMPERATURE RANGE: -180°F TO +550°F
- CONSTRUCTION: FILTER ELEMENT IS RESISTANCE WELDED AND PERMANENTLY SPIN SWAGED INTO FITTING

PLEASE NOTE:

- STANDARD PARTS ARE NOT READILY AVAILABLE; HOWEVER, WE MAINTAIN INVENTORY OF SUB-COMPONENTS TO MINIMIZE DELIVERY TIME ONCE AN ORDER IS PLACED
- ANY MODIFICATIONS TO STANDARD PART WILL BE RECLASSIFIED AS A CUSTOM PART, REQUIRING A UNIQUE PART NUMBER

PART NUMBER EXAMPLES: 84400-4-17 OR 84400P-6K-40

Dash No 1	Tube OD	A MAX	D ± .005	(W) REFERENCE	B MAX	Material 2
4	.250"	1.14"	.550"	.150"	.435"	
5	.312"	1.16"	.550"	.150"	.450"	304
6	.375"	1.27"	.556"	.263"	.435"	C (303)
8	.500"	1.41"	.657"	.248"	.495"	K (316)
10	.625"	1.65"	.758"	.312"	.585"	R (321)
12	.750"	1.90"	.864"	.381"	.642"	

PROPRIETARY

FILTER FITTING, FLARED (FOR AS5174 (AN815) APPLICATIONS)

PART NUMBER DEFINITION: 84400 - 1 2 - 3

Micron 3	When Filtering Liquids		When Filtering Gasses	
	Nominal Micron 98% Removal	Absolute Micron 100% Removal	Nominal Micron 98% Removal	Absolute Micron 100% Removal
02	2	15	1	9
05	5	18	3.5	13
10	10	25	6	18
17	17	45	11	25
40	40	65	30	55
70	70	105	50	85
105	105	150	85	130
145	145	205	120	175
250*	250	350	200	300

CALCULATED DATA				
MICRON	FILTER ELEMENT DATA FOR A DASH 4 (.250" TUBE OD)		FILTER ELEMENT DATA FOR A DASH 5 (.312" TUBE OD)	
	EFFECTIVE FILTRATION AREA	MINIMUM COLLAPSE PRESSURE	EFFECTIVE FILTRATION AREA	MINIMUM COLLAPSE PRESSURE
02	0.49 SQ IN.	500 PSID	0.61 SQ IN.	500 PSID
05	0.49 SQ IN.	720 PSID	0.62 SQ IN.	500 PSID
10	0.49 SQ IN.	720 PSID	0.62 SQ IN.	500 PSID
17	0.50 SQ IN.	790 PSID	0.62 SQ IN.	500 PSID
40	0.50 SQ IN.	950 PSID	0.62 SQ IN.	655 PSID
70	0.50 SQ IN.	950 PSID	0.62 SQ IN.	655 PSID
105	0.50 SQ IN.	950 PSID	0.62 SQ IN.	655 PSID
145	0.51 SQ IN.	1075 PSID	0.63 SQ IN.	765 PSID
250*	0.51 SQ IN.	500 PSID	0.63 SQ IN.	500 PSID

PROPRIETARY

FILTER FITTING, FLARED (FOR AS5174 (AN815) APPLICATIONS)

PART NUMBER DEFINITION: 84400 - 1 2 - 3

CALCULATED DATA				
MICRON	FILTER ELEMENT DATA FOR A DASH 6 (.375" TUBE OD)		FILTER ELEMENT DATA FOR A DASH 8 (.500" TUBE OD)	
	EFFECTIVE FILTRATION AREA	MINIMUM COLLAPSE PRESSURE	EFFECTIVE FILTRATION AREA	MINIMUM COLLAPSE PRESSURE
02	0.73 SQ IN.	500 PSID	1.10 SQ IN.	470 PSID
05	0.74 SQ IN.	500 PSID	1.11 SQ IN.	500 PSID
10	0.74 SQ IN.	500 PSID	1.11 SQ IN.	500 PSID
17	0.74 SQ IN.	500 PSID	1.11 SQ IN.	500 PSID
40	0.75 SQ IN.	500 PSID	1.12 SQ IN.	500 PSID
70	0.75 SQ IN.	500 PSID	1.12 SQ IN.	500 PSID
105	0.75 SQ IN.	500 PSID	1.12 SQ IN.	500 PSID
145	0.75 SQ IN.	635 PSID	1.12 SQ IN.	500 PSID
250*	0.75 SQ IN.	445 PSID	1.13 SQ IN.	200 PSID

CALCULATED DATA				
MICRON	FILTER ELEMENT DATA FOR A DASH 10 (.625" TUBE OD)		FILTER ELEMENT DATA FOR A DASH 12 (.750" TUBE OD)	
	EFFECTIVE FILTRATION AREA	MINIMUM COLLAPSE PRESSURE	EFFECTIVE FILTRATION AREA	MINIMUM COLLAPSE PRESSURE
02	1.67 SQ IN.	210 PSID	2.26 SQ IN.	145 PSID
05	1.68 SQ IN.	375 PSID	2.27 SQ IN.	260 PSID
10	1.68 SQ IN.	375 PSID	2.27 SQ IN.	260 PSID
17	1.68 SQ IN.	445 PSID	2.28 SQ IN.	310 PSID
40	1.69 SQ IN.	500 PSID	2.28 SQ IN.	425 PSID
70	1.69 SQ IN.	500 PSID	2.28 SQ IN.	425 PSID
105	1.69 SQ IN.	500 PSID	2.28 SQ IN.	425 PSID
145	1.70 SQ IN.	500 PSID	2.29 SQ IN.	500 PSID
250*	1.70 SQ IN.	90 PSID	2.30 SQ IN.	65 PSID

PROPRIETARY